Contents

Tie Rod Cylinders of 2500psi series----------2~5
Tie Rod Cylinders of 3000psi series----------6~8
Welded Cylinders with clevis mounting----------9~12
Welded Cylinders with cross tube mounting----------13~16

Welded Cylinders for heavy duty----------17
Welded Cylinders with cushion----------18
Telescope Cylinders ----------19

Caution information----------20

For Customer service, please contact:

Danz Tech Corporation

735 West Duarte Road, Suite 205, Arcadia, CA 91007, USA

Tel: 1-626-574-7888 Fax: 1-626-574-7979

Email: danz@danzusa.com

Specialized in Hydraulic Cylinder manufacturing with better quality & service

Tie Rod Cylinders

2T Series

2500 PSI Max Working Pressure

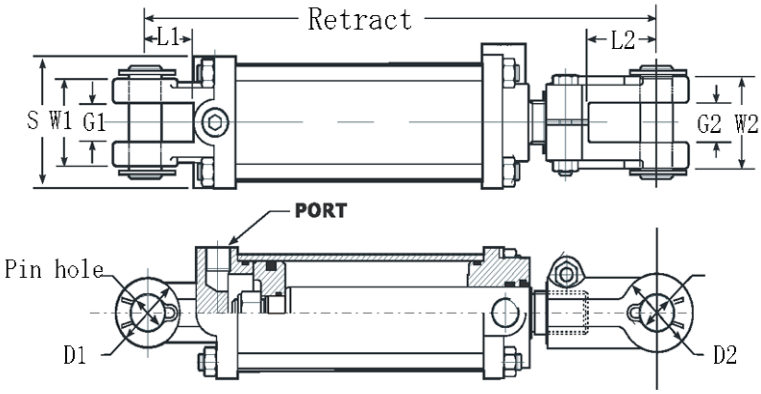

TUBE---Precision finished steel tube for longer seal & cylinder life
TUBE SEAL---O-ring with anti-extrusion backup washer
ROD---Hard chrome plated 1045 high strength steel for extended cylinder life in harsh application
ROD SEAL---Polyurethane U-Cup
ROD WIPER---Heavy duty metal encased nitrite rubber
PISTON--- Precision machined ductile iron with malleable bearing surface
PISTON SEAL---Glass filled Teflon seal and O-ring with backup washer?
PISTON NUT---Heavy duty self locking piston nut
GLAND (ROD CAP) ---High grade ductile iron
END CLEVIS CAP--- High grade ductile iron with drilled oil passages
ROD CLEVIS--- Ductile iron with set screw locking device
TIE ROD---High tensile steel
PORTS---Double ported NPTF for greater flexibility in assembling
PAINT COLOR---Semi-gloss and black or customized colors

DIMENSIONS in inch for 2T Series Tie Rod Cylinders : Bore size 2.0"

Item	Rod	Stroke	Retract	Tube Wall	Port NPTF	Tie Rod	Pin Hole	L1	L2	S	W1	G1	W2	G2				Wt. lbs.
2T2004	1.13	4	14.25	0.19	3/8	3/8	1.015	2.06	2.13	3.0	2.5	1.13	2.5	1.13				17
2T2006		6	16.25															18
2T2008		8	18.25															19
2T2010		10	20.25															21
2T2012		12	22.25															22
2T2014		14	24.25															24
2T2016		16	26.25															25
2T2018		18	28.25															26
2T2020		20	30.25															28
2T2024		24	34.25															31
2T2030		30	40.25															35
2T2036		36	46.25															39
2T2008-ASAE		8	20.25															20

Tie Rod Cylinders

2T Series

2500 PSI Max Working Pressure

DIMENSIONS in inch for 2T Series Tie Rod Cylinders : Bore size 2.5"

Item	Rod	Stroke	Retract	Tube Wall	Port NPTF	Tie Rod	Pin Hole	L1	L2	S	W1	G1	W2	G2				Wt. lbs.
2T2504		4	14.25															18
2T2506		6	16.25															20
2T2508		8	18.25															22
2T2510		10	20.25															23
2T2512		12	22.25															25
2T2514	1.13	14	24.25	0.19	3/8	3/8	1.015	2.06	2.13	3.13	2.5	1.13	2.5	1.13				27
2T2516		16	26.25															29
2T2518		18	28.25															31
2T2520		20	30.25															33
2T2524		24	34.25															36
2T2530		30	40.25															41
2T2536		36	46.25															46
2T2508-ASAE		8	20.25															22

DIMENSIONS in inch for 2T Series Tie Rod Cylinders : Bore size 3.0"

Item	Rod	Stroke	Retract	Tube Wall	Port NPTF	Tie Rod	Pin Hole	L1	L2	S	W1	G1	W2	G2				Wt. lbs.
2T3004		4	14.25															23
2T3006		6	16.25															25
2T3008		8	18.25															28
2T3010		10	20.25															30
2T3012		12	22.25															32
2T3014		14	24.25															34
2T3016	1.25	16	26.25	0.19	1/2	1/2	1.015	2.06	2.13	3.75	2.5	1.13	2.63	1.13				36
2T3018		18	28.25															38
2T3020		20	30.25															40
2T3024		24	34.25															45
2T3030		30	40.25															51
2T3036		36	46.25															58
2T3008-ASAE		8	20.25															29
2T3016-ASAE	1.5	16	31.5				1.27											41

Tie Rod Cylinders

2T Series

2500 PSI Max Working Pressure

DIMENSIONS in inch for 2T Series Tie Rod Cylinders : Bore size 3.5"

Item	Rod	Stroke	Retract	Tube Wall	Port NPTF	Tie Rod	Pin Hole	L1	L2	S	W1	G1	W2	G2				Wt. lbs.
2T3504	1.25	4	14.25	0.19	1/2	5/8	1.015	2.06	2.13	4.75	2.5	1.13	2.63	1.13				33
2T3506		6	16.25															35
2T3508		8	18.25															37
2T3510		10	20.25															38
2T3512		12	22.25															40
2T3514		14	24.25															43
2T3516		16	26.25															46
2T3518		18	28.25															49
2T3520		20	30.25															52
2T3524		24	34.25															57
2T3530		30	40.25															64
2T3536		36	46.25															71
2T3508-ASAE		8	20.25															36
2T3516-ASAE	1.5	16	31.5				1.27											51

DIMENSIONS in inch for 2T Series Tie Rod Cylinders : Bore size 4.0"

Item	Rod	Stroke	Retract	Tube Wall	Port NPTF	Tie Rod	Pin Hole	L1	L2	S	W1	G1	W2	G2				Wt. lbs.
2T4004	1.25	4	14.25	0.19	1/2	5/8	1.015	2.06	2.13	4.75	2.63	1.13	2.63	1.13				37
2T4006		6	16.25															39
2T4008		8	18.25															42
2T4010		10	20.25															45
2T4012		12	22.25															48
2T4014		14	24.25															50
2T4016		16	26.25															53
2T4018	1.5	18	28.25															59
2T4020		20	30.25															62
2T4024-150		24	34.25															68
2T4024-175	1.75	24	34.25															74
2T4024-200	2.0	24	34.25															80
2T4030		30	40.25															91
2T4036		36	46.25															102
2T4008-ASAE	1.25	8	20.25															43
2T4016-ASAE	1.75	16	31.5				1.27											70

Tie Rod Cylinders

2T Series

2500 PSI Max Working Pressure

DIMENSIONS in inch for 2T Series Tie Rod Cylinders : Bore size 5.0"																		
Item	**Rod**	**Stroke**	**Retract**	**Tube Wall**	**Port NPTF**	**Tie Rod**	**Pin Hole**	**L1**	**L2**	**S**	**W1**	**G1**	**W2**	**G2**				**Wt. lbs.**
2T5008	1.5	8	20.25	0.19	1/2	3/4	1.015	2.25	2.13	6.0	3.5	1.31	3.0	1.19				68
2T5010		10	22.25															72
2T5012	2.0	12	24.25															80
2T5014		14	26.25															84
2T5016		16	28.25															88
2T5018		18	30.25															92
2T5020		20	32.25															96
2T5024		24	36.25															104
2T5030		30	42.25															116
2T5036		36	48.25															128
2T5016-ASAE	2.0	16	31.5				1.27											96

Tie Rod Cylinders

3T Series

3000 PSI Max Working Pressure

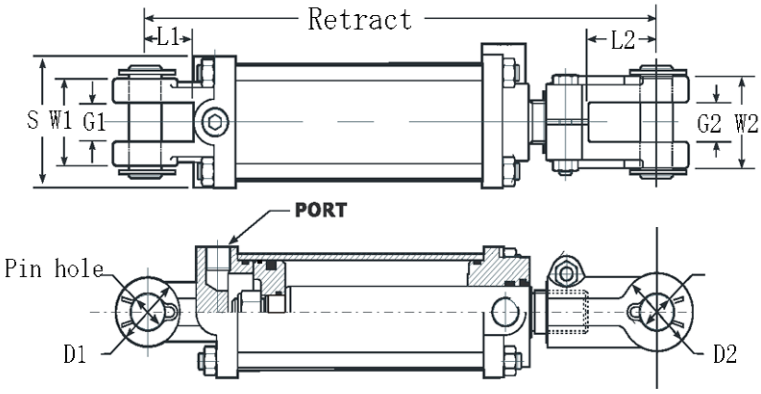

TUBE---Precision finished steel tube for longer seal & cylinder life
TUBE SEAL---O-ring with anti-extrusion backup washer
ROD---Hard chrome plated 1045 high strength steel for extended cylinder life in harsh application
ROD SEAL---Polyurethane U-Cup
ROD WIPER---Heavy duty metal encased nitrite rubber
PISTON--- Precision machined ductile iron with malleable bearing surface
PISTON SEAL---Glass filled Teflon seal and O-ring with backup washer?
PISTON WEAR RING---Glass filled nylon wear ring
PISTON NUT---Heavy duty self locking piston nut
GLAND (ROD CAP) ---High grade ductile iron
END CLEVIS CAP--- High grade ductile iron with drilled oil passages
ROD CLEVIS--- Ductile iron with set screw locking device
TIE ROD---High tensile steel
PORTS---Double ported SAE for greater flexibility in assembling
PAINT COLOR---Semi-gloss and black or customized colors

DIMENSIONS in inch for 3T Series Tie Rod Cylinders : Bore size 2.0"

Item	Rod	Stroke	Retract	Tube Wall	Port SAE	Tie Rod	Pin Hole	L1	L2	S	W1	G1	W2	G2				Wt. lbs.
3T2008		8	18.25															19
3T2010		10	20.25															21
3T2012		12	22.25															22
3T2014		14	24.25	0.19	SAE8	3/8	1.015	2.06	2.13	3.0	2.5	1.13	2.5	1.13				24
3T2016	1.13	16	26.25															25
3T2018		18	28.25															26
3T2020		20	30.25															28
3T2024		24	34.25															31
3T2008-ASAE		8	20.25															20

DIMENSIONS in inch for 3T Series Tie Rod Cylinders : Bore size 2.5"

Item	Rod	Stroke	Retract	Tube Wall	Port SAE	Tie Rod	Pin Hole	L1	L2	S	W1	G1	W2	G2	D1	D2		Wt. lbs.
3T2508		8	18.25															22
3T2510		10	20.25															23
3T2512		12	22.25															24
3T2514		14	24.25	0.19	SAE8	3/8	1.015	2.06	2.13	3.13	2.5	1.13	2.5	1.13	2.0	2.0		26
3T2516	1.13	16	26.25															28
3T2518		18	28.25															30
3T2520		20	30.25															32
3T2524		24	34.25															35
2T2508-ASAE		8	20.25															23

Tie Rod Cylinders

3T Series

3000 PSI Max Working Pressure

DIMENSIONS in inch for 3T Series Tie Rod Cylinders : Bore size 3.0"

Item	Rod	Stroke	Retract	Tube Wall	Port SAE	Tie Rod	Pin Hole	L1	L2	S	W1	G1	W2	G2				Wt. lbs.
3T3008	1.25	8	18.25	0.19	SAE8	1/2	1.015	2.06	2.13	3.75	2.5	1.13	2.63	1.13				28
3T3010		10	20.25															30
3T3012		12	22.25															32
3T3014		14	24.25															35
3T3016	1.5	16	26.25															38
3T3018		18	28.25															40
3T3020		20	30.25															42
3T3024		24	34.25															47
3T3008-ASAE	1.25	8	20.25															28
3T3016-ASAE	1.5	16	31.5				1.27											41

DIMENSIONS in inch for 3T Series Tie Rod Cylinders : Bore size 3.5"

Item	Rod	Stroke	Retract	Tube Wall	Port SAE	Tie Rod	Pin Hole	L1	L2	S	W1	G1	W2	G2				Wt. lbs.
3T3508	1.25	8	18.25	0.19	SAE8	5/8	1.015	2.06	2.13	4.75	2.5	1.13	2.63	1.13				37
3T3510		10	20.25															39
3T3512		12	22.25															41
3T3514		14	24.25															43
3T3516	1.5	16	26.25															46
3T3518		18	28.25															50
3T3520		20	30.25															53
3T3524		24	34.25															57
3T3508-ASAE	1.25	8	20.25															38
3T3516-ASAE	1.5	16	31.5				1.27											51

Tie Rod Cylinders

3T Series

3000 PSI Max Working Pressure

DIMENSIONS in inch for 3T Series Tie Rod Cylinders : Bore size 4.0"

Item	Rod	Stroke	Retract	Tube Wall	Port SAE	Tie Rod	Pin Hole	L1	L2	S	W1	G1	W2	G2				Wt. lbs.
3T4008	1.5	8	18.25	0.19	SAE8	5/8	1.015	2.06	2.13	4.75	2.63	1.13	2.63	1.13				43
3T4010		10	20.25															46
3T4012		12	22.25															49
3T4014		14	24.25															53
3T4016	1.75	16	26.25															61
3T4018		18	28.25															64
3T4020		20	30.25															68
3T4024-175		24	34.25															74
3T4024-200	2.0	24	34.25															80
3T4008-ASAE	1.5	8	20.25															45
3T4016-ASAE	1.75	16	31.5				1.27											65

DIMENSIONS in inch for 3T Series Tie Rod Cylinders : Bore size 5.0"

Item	Rod	Stroke	Retract	Tube Wall	Port SAE	Tie Rod	Pin Hole	L1	L2	S	W1	G1	W2	G2	D1	D2		Wt. lbs.
3T5010	2.0	10	22.25	0.25	SAE8	3/4	1.27	2.25	2.13	6.0	3.5	1.31	3.0	1.19	2.88	2.63		79
3T5012		12	24.25															86
3T5014		14	26.25															92
3T5016		16	28.25															97
3T5018		18	30.25															102
3T5020		20	32.25															107
3T5024		24	36.25															116
3T5008-ASAE		8	20.25															78
3T5016-ASAE		16	31.5															100

Welded Cylinders

With clevis mounting

3000 PSI Max Working Pressure

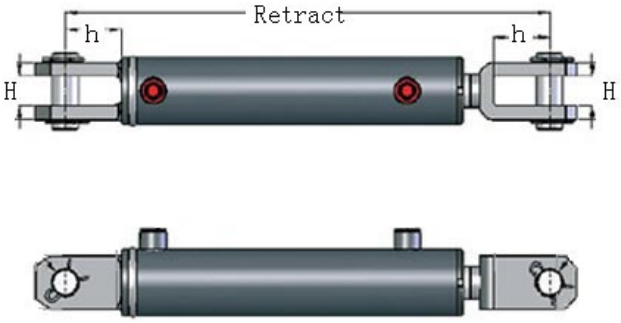

TUBE---Precision finished steel tube for longer seal & cylinder life
TUBE SEAL---O-ring with anti-extrusion backup washer
ROD---Hard chrome plated 1045 high strength steel for extended cylinder life
ROD SEAL---Polyurethane U-Cup
ROD WIPER---Heavy duty metal encased nitrite rubber
PISTON--- Precision machined ductile iron or steel
PISTON SEAL---Glass filled Teflon seal and O-ring with backup washer?
PISTON WEAR RING---Glass filled nylon wear ring
PISTON NUT---Heavy duty self locking piston nut
GLAND (ROD CAP) ---High grade ductile iron or steel
END CAP--- Durable steel to support continuous high load
ROD END CLEVIS--- Ductile iron or steel
Pin & Retainer---High tensile steel
PAINT COLOR---Semi-gloss and black or customized colors

DIMENSIONS in inch for Welded cylinder with clevis mounting: Bore size 2.0"

Item	Rod	Stroke	Retract	Tube Wall	Port	Pin Hole	H	h				Estimated Wt. lbs.
W2004C		4	14.25									16
W2006C		6	16.25									17
W2008C		8	18.25									18
W2010C		10	20.25									19
W2012C		12	22.25									20
W2014C		14	24.25									21
W2016C		16	26.25									22
W2018C	1.25	18	28.25	0.25	SAE 06	1.015	1.125	2.125				23
W2020C		20	30.25									25
W2024C		24	34.25									28
W2028C		28	38.25									32
W2030C		30	40.25									34
W2032C		32	42.25									36
W2034C		34	44.25									38
W2036C		36	46.25									40

Welded Cylinders

With clevis mounting

3000 PSI Max Working Pressure

DIMENSIONS in inch for Welded cylinder with clevis mounting: Bore size 2.5"												
Item	**Rod**	**Stroke**	**Retract**	**Tube Wall**	**Port**	**Pin Hole**	**H**	**h**				**Estimated Wt. lbs.**
W2504C		4	14.25									19
W2506C		6	16.25									20
W2508C		8	18.25									21
W2510C		10	20.25									23
W2512C		12	22.25									25
W2514C		14	24.25									27
W2516C		16	26.25									29
W2518C	1.50	18	28.25	0.25	SAE 08	1.015	1.125	2.125				31
W2520C		20	30.25									33
W2524C		24	34.25									37
W2528C		28	38.25									41
W2530C		30	40.25									43
W2532C		32	42.25									45
W2534C		34	44.25									47
W2536C		36	46.25									49

DIMENSIONS in inch for Welded cylinder with clevis mounting: Bore size 3.0"												
Item	**Rod**	**Stroke**	**Retract**	**Tube Wall**	**Port**	**Pin Hole**	**H**	**h**				**Estimated Wt. lbs.**
W3004C		4	14.25									23
W3006C		6	16.25									25
W3008C		8	18.25									27
W3010C		10	20.25									29
W3012C		12	22.25									32
W3014C		14	24.25									34
W3016C		16	26.25									37
W3018C	1.50	18	28.25	0.25	SAE 08	1.015	1.125	2.125				40
W3020C		20	30.25									42
W3024C		24	34.25									47
W3028C		28	38.25									52
W3030C		30	40.25									55
W3032C		32	42.25									58
W3034C		34	44.25									62
W3036C		36	46.25									65

Welded Cylinders

With clevis mounting

3000 PSI Max Working Pressure

DIMENSIONS in inch for Welded cylinder with clevis mounting: Bore size 3.5"												
Item	**Rod**	**Stroke**	**Retract**	**Tube Wall**	**Port**	**Pin Hole**	**H**	**h**				**Estimated Wt. lbs.**
W3504C		4	14.25									35
W3506C		6	16.25									36
W3508C		8	18.25									38
W3510C		10	20.25									40
W3512C		12	22.25									43
W3514C		14	24.25									46
W3516C		16	26.25									49
W3518C	1.75	18	28.25	0.25	SAE 08	1.27	1.125	2.00				52
W3520C		20	30.25									55
W3524C		24	34.25									61
W3528C		28	38.25									67
W3530C		30	40.25									70
W3532C		32	42.25									73
W3534C		34	44.25									76
W3536C		36	46.25									79

DIMENSIONS in inch for Welded cylinder with clevis mounting: Bore size 4.0"												
Item	**Rod**	**Stroke**	**Retract**	**Tube Wall**	**Port**	**Pin Hole**	**H**	**h**				**Estimated Wt. lbs.**
W4004C		4	14.25									46
W4006C		6	16.25									47
W4008C		8	18.25									49
W4010C		10	20.25									51
W4012C		12	22.25									53
W4014C		14	24.25									56
W4016C		16	26.25									59
W4018C	2.00	18	28.25	0.25	SAE 08	1.52	1.625	1.75				63
W4020C		20	30.25									67
W4024C		24	34.25									75
W4028C		28	38.25									83
W4030C		30	40.25									88
W4032C		32	42.25									92
W4034C		34	44.25									96
W4036C		36	46.25									100
W4048C		48	58.25									123

Welded Cylinders

With clevis mounting

3000 PSI Max Working Pressure

DIMENSIONS in inch for Welded cylinder with clevis mounting: Bore size 5.0"												
Item	**Rod**	**Stroke**	**Retract**	**Tube Wall**	**Port**	**Pin Hole**	**H**	**h**				**Estimated Wt. lbs.**
W5004C	2.50	4	19.75	0.313	SAE 12	2.02	2.125	3.00				86
W5006C		6	21.75									91
W5008C		8	23.75									96
W5010C		10	25.75									101
W5012C		12	27.75									106
W5014C		14	29.75									111
W5016C		16	31.75									116
W5018C		18	33.75									121
W5020C		20	35.75									126
W5024C		24	39.75									136
W5028C		28	43.75									146
W5030C		30	45.75									151
W5032C		32	47.75									156
W5036C		36	51.75									166

Welded Cylinders

With cross tube mounting

3000 PSI Max Working Pressure

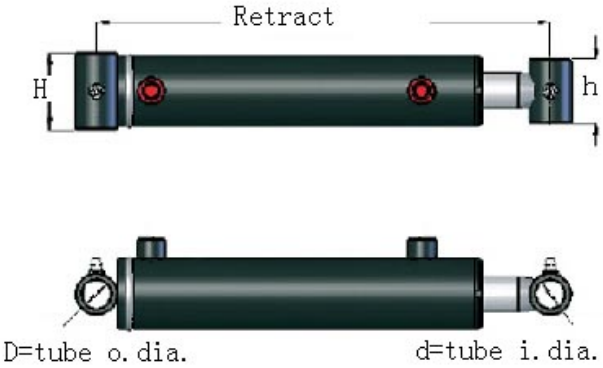

TUBE---Precision finished steel tube for longer seal & cylinder life
TUBE SEAL---O-ring with anti-extrusion backup washer
ROD---Hard chrome plated 1045 high strength steel for extended cylinder life
ROD SEAL---Polyurethane U-Cup
ROD WIPER---Heavy duty metal encased nitrite rubber
PISTON--- Precision machined ductile iron or steel
PISTON SEAL---Glass filled Teflon seal and O-ring with backup washer?
PISTON WEAR RING---Glass filled nylon wear ring
PISTON NUT---Heavy duty self locking piston nut
GLAND (ROD CAP) ---High grade ductile iron or steel
END CAP--- Durable steel to support continuous high load
CROSS TUBE END--- Durable steel
PAINT COLOR---Semi-gloss and black or customized colors

DIMENSIONS in inch for Welded cylinder with cross tube mounting: Bore size 1.5"

Item	Rod	Stroke	Retract	Tube Wall	Port	D	d	H	h			Estimated Wt. lbs.
W1504T	1.00	4	12.0	0.25	SAE 06	1.50	0.76	2.25	2.00			8
W1506T		6	14.0									9
W1508T		8	16.0									10
W1510T		10	18.0									11
W1512T		12	20.0									12
W1514T		14	22.0									13
W1516T		16	24.0									15
W1518T		18	26.0									16

DIMENSIONS in inch for Welded cylinder with cross tube mounting: Bore size 2.0"

Item	Rod	Stroke	Retract	Tube Wall	Port	D	d	H	h			Estimated Wt. lbs.
W2004T	1.25	4	12.0	0.25	SAE 06	1.75	1.01	2.75	2.25			13
W2006T		6	14.0									14
W2008T		8	16.0									15
W2010T		10	18.0									16
W2012T		12	20.0									17
W2014T		14	22.0									18
W2016T		16	24.0									19
W2018T		18	26.0									20
W2020T		20	28.0									22
W2024T		24	32.0									25
W2028T		28	36.0									29
W2030T		30	38.0									31
W2032T		32	40.0									33
W2036T		36	44.0									37
W2040T		40	48.0									41
W2048T		48	56.0									48

Welded Cylinders

With cross tube mounting

3000 PSI Max Working Pressure

DIMENSIONS in inch for Welded cylinder with cross tube mounting: Bore size 2.5"												
Item	**Rod**	**Stroke**	**Retract**	**Tube Wall**	**Port**	**D**	**d**	**H**	**h**			**Estimated Wt. lbs.**
W2504T	1.5	4	12.0	0.25	SAE 08	1.75	1.01	3.25	2.25			17
W2506T		6	14.0									19
W2508T		8	16.0									21
W2510T		10	18.0									23
W2512T		12	20.0									26
W2514T		14	22.0									28
W2516T		16	24.0									30
W2518T		18	26.0									32
W2520T		20	28.0									35
W2524T		24	32.0									39
W2528T		28	36.0									43
W2530T		30	38.0									45
W2532T		32	40.0									47
W2536T		36	44.0									51
W2540T		40	48.0									55
W2548T		48	56.0									62

DIMENSIONS in inch for Welded cylinder with cross tube mounting: Bore size 3.0"												
Item	**Rod**	**Stroke**	**Retract**	**Tube Wall**	**Port**	**D**	**d**	**H**	**h**			**Estimated Wt. lbs.**
W3004T	1.5	4	12.0	0.25	SAE 08	1.75	1.01	3.75	2.25			21
W3006T		6	14.0									23
W3008T		8	16.0									25
W3010T		10	18.0									27
W3012T		12	20.0									29
W3014T		14	22.0									32
W3016T		16	24.0									35
W3018T		18	26.0									38
W3020T		20	28.0									41
W3024T		24	32.0									45
W3028T		28	36.0									49
W3030T		30	38.0									52
W3032T		32	40.0									55
W3036T		36	44.0									59
W3040T		40	48.0									63
W3048T		48	56.0									71

Welded Cylinders

With cross tube mounting

3000 PSI Max Working Pressure

DIMENSIONS in inch for Welded cylinder with cross tube mounting: Bore size 3.5"												
Item	**Rod**	**Stroke**	**Retract**	**Tube Wall**	**Port**	**D**	**d**	**H**	**h**			**Estimated Wt. lbs.**
W3504T	1.75	4	12.0	0.25	SAE 08	2.00	1.26	4.25	2.25			28
W3506T		6	14.0									30
W3508T		8	16.0									33
W3510T		10	18.0									36
W3512T		12	20.0									39
W3514T		14	22.0									42
W3516T		16	24.0									45
W3518T		18	26.0									48
W3520T		20	28.0									51
W3524T		24	32.0									57
W3528T		28	36.0									63
W3530T		30	38.0									66
W3532T		32	40.0									70
W3536T		36	44.0									76
W3540T		40	48.0									82
W3548T		48	56.0									95

DIMENSIONS in inch for Welded cylinder with cross tube mounting: Bore size 4.0"												
Item	**Rod**	**Stroke**	**Retract**	**Tube Wall**	**Port**	**D**	**d**	**H**	**h**			**Estimated Wt. lbs.**
W4004T	2.0	4	14.0	0.25	SAE 08	2.00	1.26	4.75	2.50			34
W4006T		6	16.0									38
W4008T		8	18.0									42
W4010T		10	20.0									46
W4012T		12	22.0									50
W4014T		14	24.0									55
W4016T		16	26.0									59
W4018T		18	28.0									63
W4020T		20	30.0									68
W4024T		24	34.0									74
W4028T		28	38.0									80
W4030T		30	40.0									84
W4032T		32	42.0									88
W4036T		36	46.0									95
W4040T		40	50.0									102
W4048T		48	58.0									115

Welded Cylinders

With cross tube mounting

3000 PSI Max Working Pressure

DIMENSIONS in inch for Welded cylinder with cross tube mounting: Bore size 5.0"												
Item	**Rod**	**Stroke**	**Retract**	**Tube Wall**	**Port**	**D**	**d**	**H**	**h**			**Estimated Wt. lbs.**
W5008T	2.5	8	20.0	0.31	SAE 12	2.50	1.51	6.00	3.25			76
W5010T		10	22.0									81
W5012T		12	24.0									86
W5014T		14	26.0									91
W5016T		16	28.0									96
W5018T		18	30.0									101
W5020T		20	32.0									106
W5024T		24	36.0									116
W5028T		28	40.0									126
W5030T		30	42.0									131
W5032T		32	44.0									136
W5036T		36	48.0									147
W5040T		40	52.0									158
W5048T		48	60.0									180

Welded Cylinders

WH series For heavy duty application

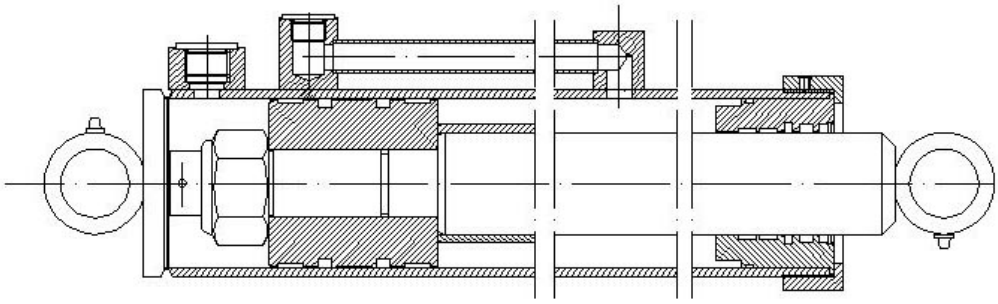

※ **Heavy duty U-CUP rod seal & wear ring & rod buffer seal on rod**
※ **Double piston seals & wear rings on piston**
※ **Special bronze scraper with retainer as wiper**
※ **Customized end mounting and sizes are available**

Feel free to contact us for details

Welded Cylinders

With cushion effect

WN type

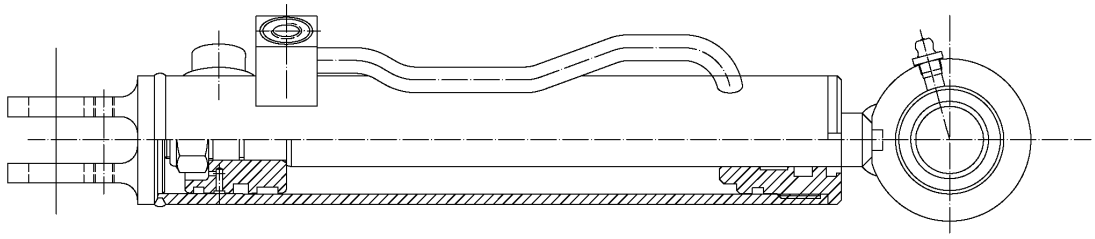

※ **With cushion effect at retracted last 0.5~1.5 inch by damping**
※ **Customized end mounting and sizes are available**

WNV type

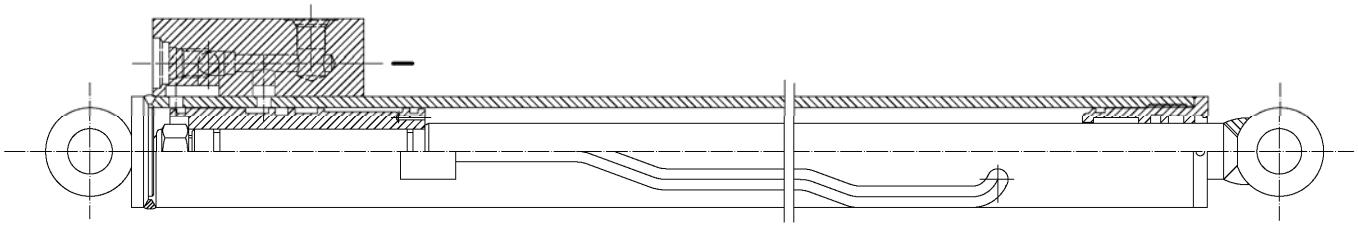

※ **With cushion effect at retracting by check & needle valve, and at extending by damping**
※ **Customized end mounting and sizes are available**

WNVV type

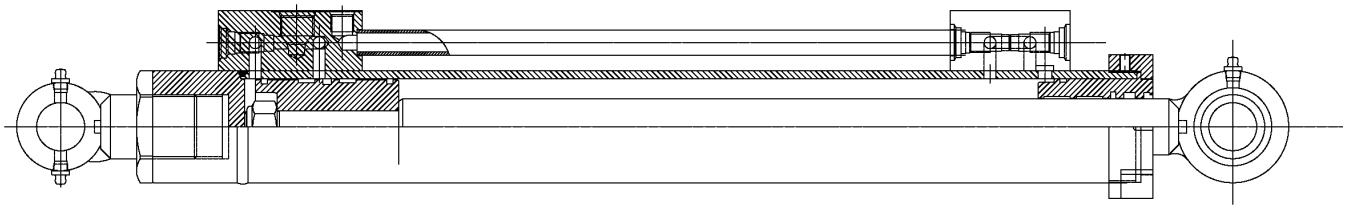

※ **With cushion effect at retracting and extending by check & needle valve**
※ **Customized end mounting and sizes are available**

Feel free to contact us for details

Welded Cylinders

Telescope

T3D type

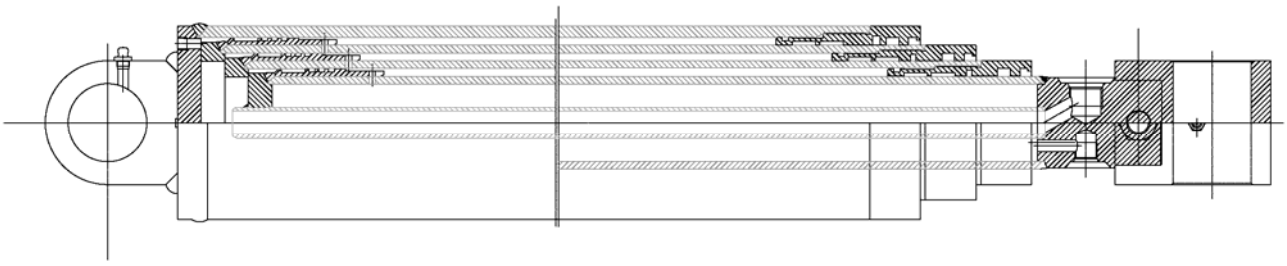

※ **Double acting with 3 stages, wear ring & rod seal & wiper on rod, wear ring & O-ring on piston**
※ **Customized end mounting and sizes are available**

T3S type

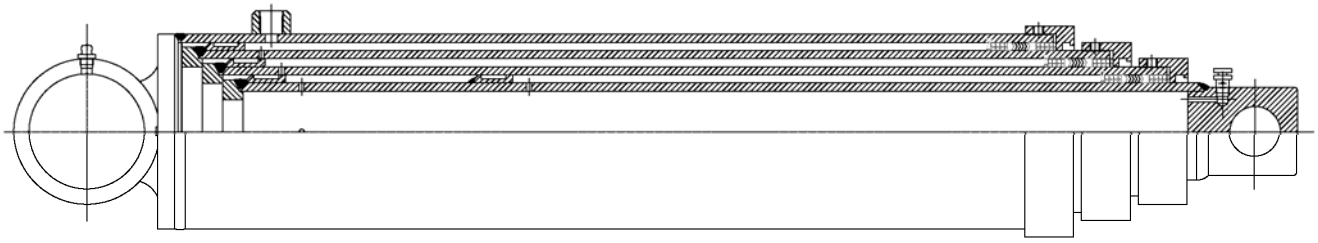

※ **Single acting with 3 stages, wear ring & VEE packing on rod, wear ring on piston**
※ **Customized end mounting and sizes are available**

T2S type

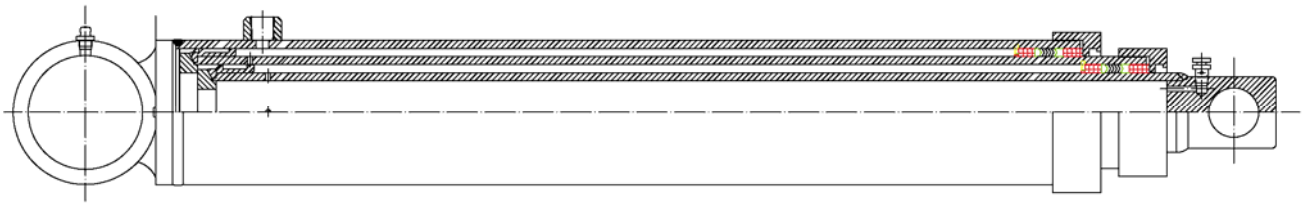

※ **Single acting with 2 stages, wear ring & VEE packing on rod, wear ring on piston**
※ **Customized end mounting and sizes are available**

Feel free to contact us for details

For Ordering and further product information,

Please contact:

USA Head Office

Danz Tech Corporation,
735 West Duarte Road, Suite 205,
Arcadia, CA 91007, USA
Tel: 1-626-574-7888
Fax: 1-626-574-7979
Email: danz@danzusa.com
www.danzusa.com

CHINA Office in Shanghai

Danz (Shanghai)
RM131, #201 Tian Shan Zhi Road,
Shanghai 200051
Tel: 86-21-62410567
Fax: 86-21-51295528
Email: johnji@danzusa.com

Caution:

※ This document and other information from Danz Enterprises Inc., its subsidiaries and authorized distributors provide products and/or system options for further investigation to users having technical experiences. It is important that you analyze all aspects of your applications, including consequences of any failure cases and review the information concerning the product or system in this catalog. Due to the variety of operating conditions and applications on these products or systems, the users, through its own analysis and testing, is solely responsible for making the final selection of the products and/or systems and assuring that all performance, safety and warning requirements of application are met.

※ Improper selection or using of product and/or system described herein or related items can cause personal injuries and property damages

※ The products described herein, including specifications, designs, availability and pricing, are subject to change by Danz Enterprises Inc. and its subsidiaries at any time without notice.